FEDERAL SUPPLY CLASS
5306

RATIONALE

UPDATE TO ASME Y14.5-2018. UPDATE LEAD THREAD CHAMFER TO AS1132. REVISE POSITION FCF ON MAJ DIA TO INCLUDE NEW DATUM C PER AS1132. REVISE LIGHTENING HOLE CONFIGURATION TO AS1132. REVISE HEAD TO SHANK FILLET TO CR. ADD "COMPOSITION SIMILAR TO" TO UNS IN NOTE 2. GENERAL EDITORIAL UPDATES.

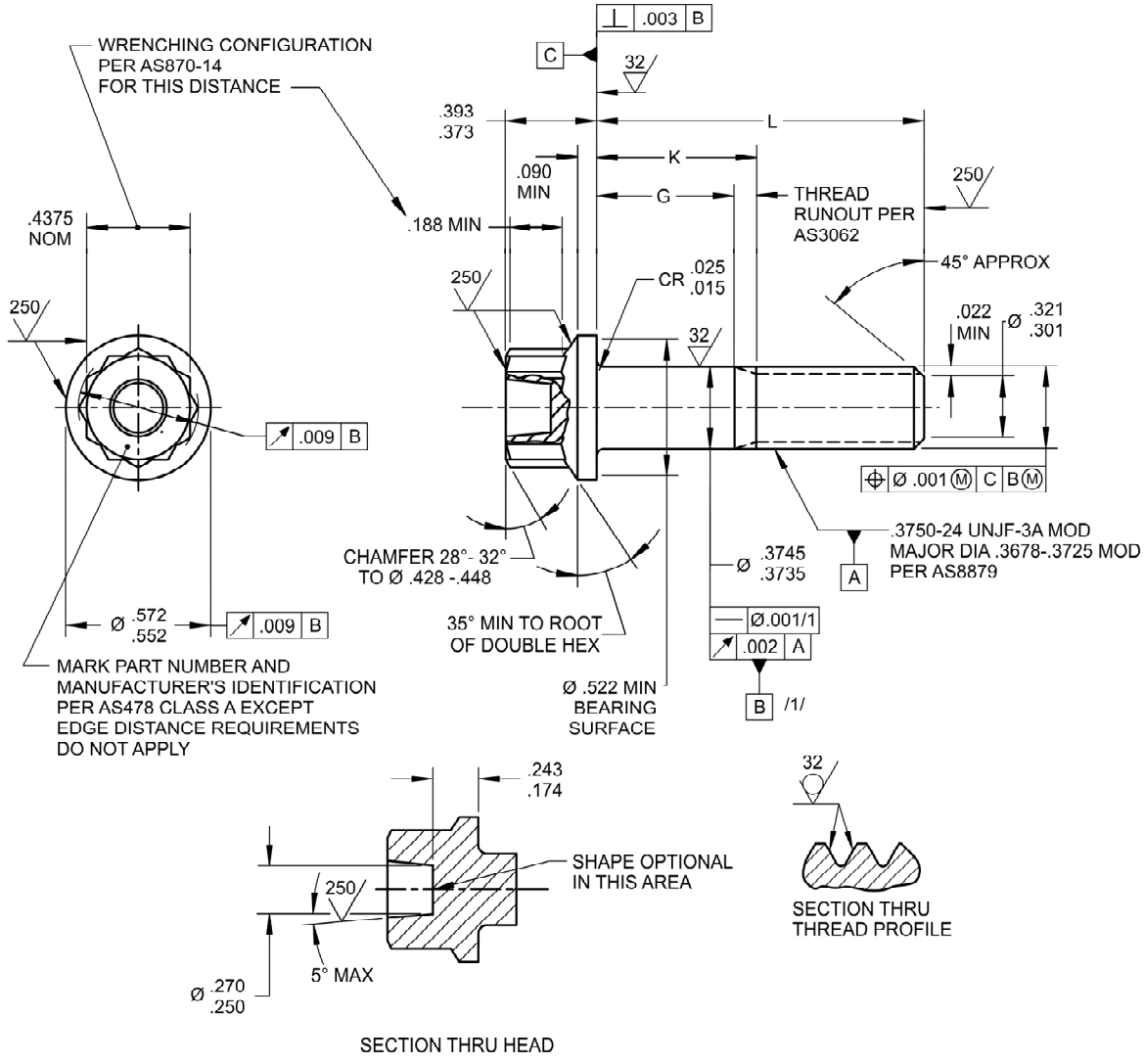

FIGURE 1 - BOLT

For more information on this standard, visit
https://www.sae.org/standards/content/AS3420C/

THIRD ANGLE PROJECTION

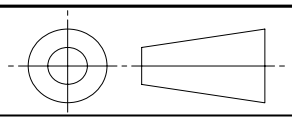

ISSUED 1985-12 REAFFIRMED 2006-05 REVISED 2022-08

CUSTODIAN: E-25

PROCUREMENT SPECIFICATION: AS7467 /3/

SAE INTERNATIONAL

AEROSPACE STANDARD

BOLT, MACHINE, DOUBLE HEX, EXTENDED WASHER HEAD, CLOSE TOL. SHANK, UNS N07718, 185 KSI MIN .3750-24 UNJF-3A (STRESS RUPTURE RESISTANT)

AS3420™
SHEET 1 OF 3

REV. C

SAE Technical Standards Board Rules provide that: " This report is published by SAE to advance the state of technical and engineering sciences. The use of this report is entirely voluntary, and its applicability and suitability for any particular use, including any patent infringement arising therefrom, is the sole responsibility of the user."

SAE reviews each technical report at least every five years at which time it may be revised, reaffirmed, stabilized, or cancelled. SAE invites your written comments and suggestions.

Copyright © 2022 SAE International
All rights reserved. No part of this publication may be reproduced, stored in a retrieval system or transmitted, in any form or by any means, electronic, mechanical, photocopying, recording, or otherwise, without the prior written permission of SAE.
TO PLACE A DOCUMENT ORDER: Tel: 877-606-7323 (inside USA and Canada) Tel: +1 724-776-4970 (outside USA)
Fax: 724-776-0790 Email: CustomerService@sae.org SAE WEB ADDRESS: http://www.sae.org